Centre Number	Candidate Number

Candidate Name _____

International General Certificate of Secondary Education
CAMBRIDGE INTERNATIONAL EXAMINATIONS

PHYSICS 0625/2

PAPER 2

OCTOBER/NOVEMBER SESSION 2002

1 hour

Candidates answer on the question paper.
No additional materials are required.

TIME 1 hour

INSTRUCTIONS TO CANDIDATES

Write your name, Centre number and candidate number in the spaces at the top of this page.
Answer **all** questions.
Write your answers in the spaces provided on the question paper.

INFORMATION FOR CANDIDATES

The number of marks is given in brackets [ ] at the end of each question or part question.
You may lose marks if you do not show your working or if you do not use appropriate units.
Take the weight of 1 kg to be 10 N (i.e. acceleration of free fall = 10 m/s^2).

FOR EXAMINER'S USE

This question paper consists of 17 printed pages and 3 blank pages.

SP (CW/SLC) S23398/3
© CIE 2002
www.root19.com
UNIVERSITY of CAMBRIDGE
Local Examinations Syndicate
+91 - 9969 353 391
[Turn over

For Examiner's Use

1 A baggage handler at an airport lifts a suitcase from the ground and places it on a moving belt. The moving belt then transfers the suitcase to the owner.

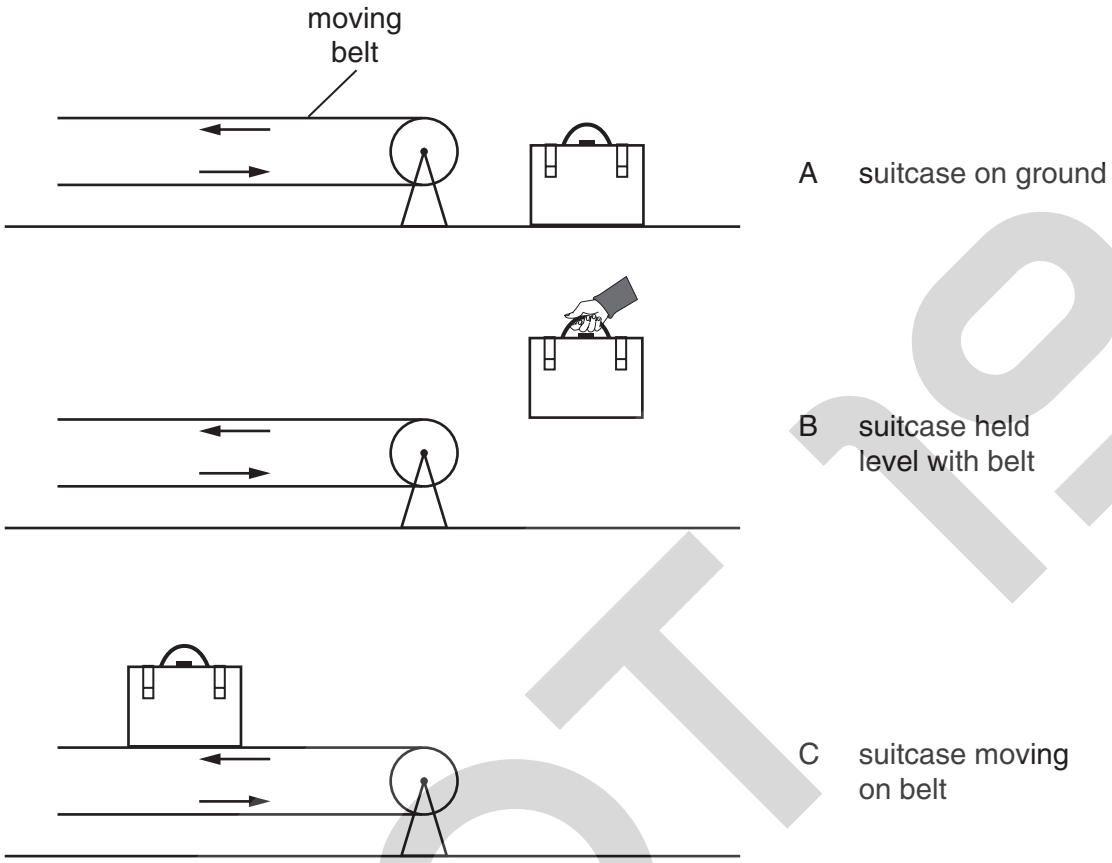

Fig. 1.1

(a) **(i)** How does the total energy of the suitcase in B compare with its energy in A? Tick one box.

The total energy is greater in B than in A. ☐

The total energy is the same in B and in A. ☐

The total energy is less in B than in A. ☐

(ii) Explain your answer.

.....

.....

[2]

(b) **(i)** How does the total energy of the suitcase in C compare with its energy in B? Tick one box.

The total energy is greater in C than in B. ☐

The total energy is the same in C and B. ☐

The total energy is less in C than in B. ☐

(ii) Explain your answer.

.....

.....
[2]

2 Here are five words relating to the transfer of thermal energy.

conductor, **convection**, **evaporation**, **insulator**, **radiation**

Complete each of the following sentences by writing in the appropriate word from the list.

(a) Cooking pots often have a wooden handle, because wood is a good thermal ..... . [1]

(b) Thermal energy reaches Earth from the Sun by means of ..... [1]

(c) Copper is a good ..... of thermal energy. [1]

(d) The heating element is put at the bottom of an electric kettle, so that ..... can rapidly transfer thermal energy throughout the water. [1]

3 Fig. 3.1 shows a vertical wire through a horizontal piece of card. There is a current down the wire.

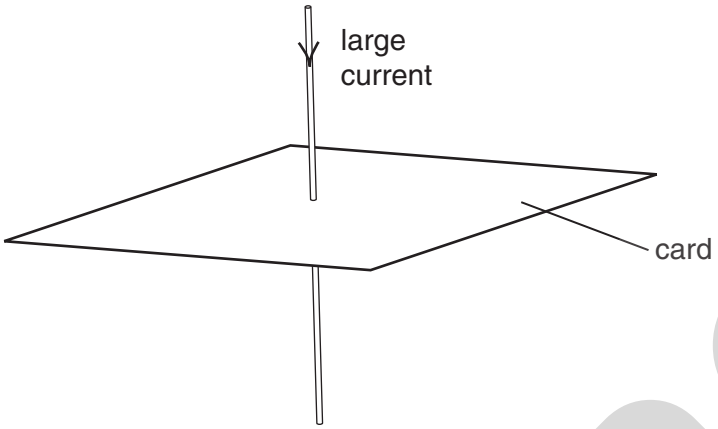

Fig. 3.1

Fig. 3.2 shows the wire and card, viewed from above.

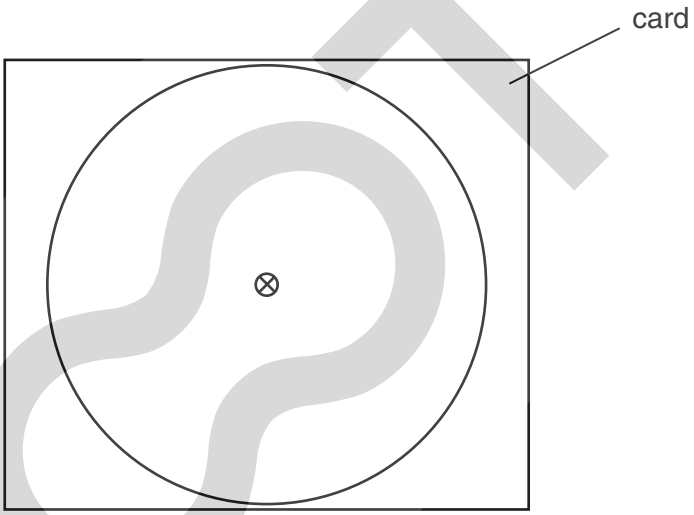

Fig. 3.2

The large circle is one of the magnetic field lines caused by the current.

On Fig. 3.2,

(a) show the direction of the magnetic field, [1]

(b) carefully draw **three** more magnetic field lines. [2]

For Examiner's Use

4 In an experiment to find the density of some oil, a student takes the following readings.

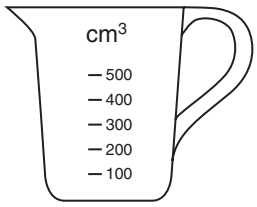

mass of empty measuring jug = 610 g

Fig. 4.1

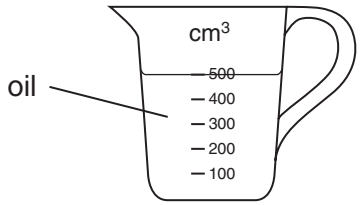

mass of jug containing 500 cm^3 of oil = 1020 g

Fig. 4.2

(a) **(i)** Calculate the mass of oil in the jug.

mass of oil =..... g

(ii) Calculate the density of the oil.

density of oil =.....

(iii) How could the volume of the oil be more accurately measured than with the measuring jug?

.....

[7]

(b) Water is more dense than oil.

On Fig. 4.3, mark approximately where the surface of the same mass of water would be if it replaced the oil. [1]

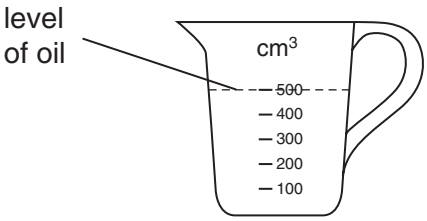

Fig. 4.3

For Examiner's Use

5 **(a)** What happens to the nucleus of an atom that undergoes radioactive decay?

.....

.....[1]

(b) Strontium-90 has a half-life of 28 years. How much time must pass before its activity falls to $\frac{1}{4}$ of its original value?

time = ... years [2]

6 **(a)** State what is meant by the *melting point* of a solid.

The melting point is .....

.....[2]

(b) Which two of the following quantities are the same? Tick **two** boxes.

boiling point of iron ☐

freezing (solidifying) point of iron ☐

melting point of iron ☐ [1]

ROOT 19

(c) Some liquid in a beaker is kept boiling by heating the beaker, as shown in Fig. 6.1.

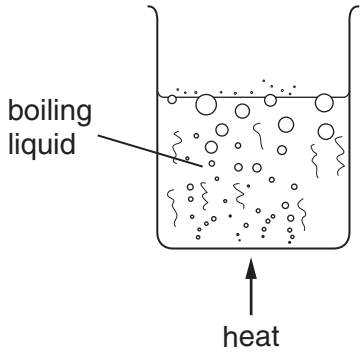

Fig. 6.1

(i) On the axes of Fig. 6.2, sketch a graph to show what happens to the temperature of the liquid whilst it is boiling.

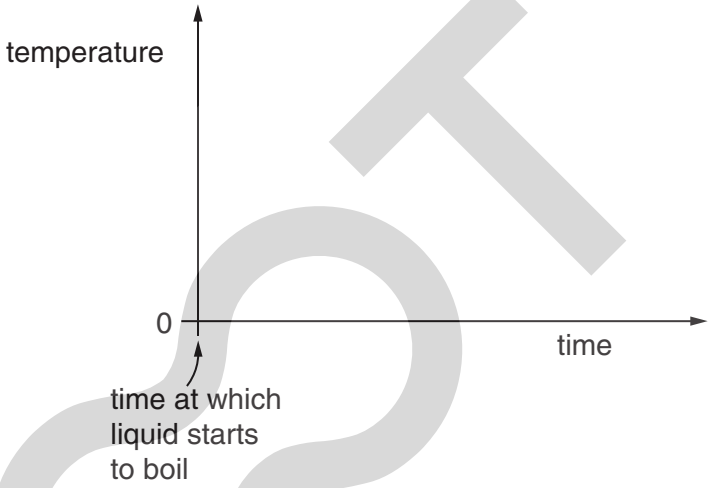

Fig. 6.2

(ii) On your graph, mark the boiling point of the liquid.

[2]

root 19

7 A student holds a polythene rod in one hand and a dry cotton cloth in the other.

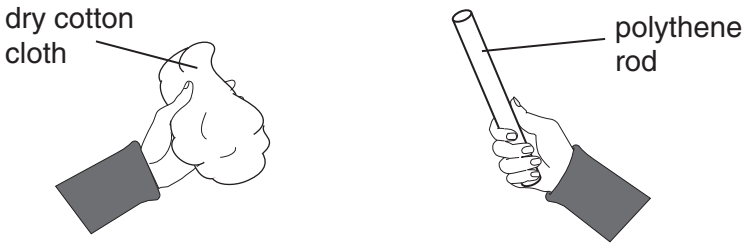

Fig. 7.1

(a) How can the student cause the rod to become charged with static electricity?

.....[1]

(b) How can the student detect that the rod has become charged?

.....[1]

(c) Around the charged rod will be an electric field.

What is meant by an *electric field*?

.....

.....[2]

root 19

(d) The charged polythene rod is brought close to another charged polythene rod that has been suspended from a nylon thread, as shown in Fig. 7.2.

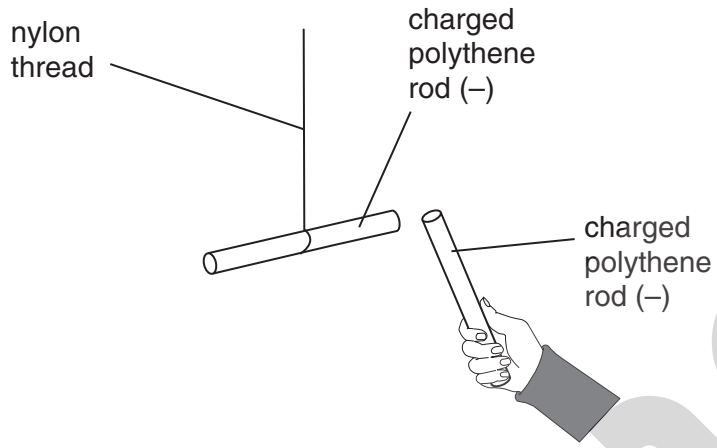

Fig. 7.2

(i) What is seen to happen to the suspended rod?

.....

(ii) Explain why this happens.

.....
[2]

(e) If the student used a copper rod in **(a)**, instead of the polythene rod, why would he not be able to charge the rod?

.....

.....[1]

root19

8 Fig. 8.1 shows an electric circuit containing a battery, a 4.7 Ω resistor, an ammeter and a variable resistor with a sliding contact. The variable resistor is set at zero. The ammeter and battery have such a small resistance that it can be ignored.

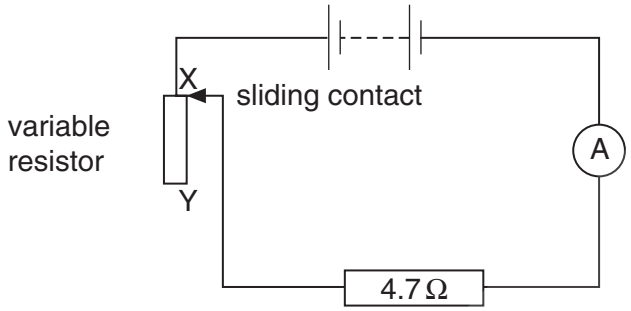

Fig. 8.1

(a) In what unit do we measure the e.m.f. of the battery? .....[1]

(b) Write down the equation that links resistance, potential difference (p.d.) and current.

[2]

(c) The ammeter shows that the current through the 4.7 Ω resistor is 0.5 A.

Calculate the p.d. across the resistor.

p.d. across resistor = ... [2]

(d) The sliding contact of the variable resistor is moved from X to Y.

(i) What happens to the resistance of the variable resistor?

.....

(ii) What happens to the reading on the ammeter?

.....
[2]

(e) The variable resistor is now adjusted to make the total resistance of the circuit 10.0 Ω. What is the resistance of the variable resistor now?

resistance of variable resistor = ... Ω [2]

ROOT 19

For Examiner's Use

9 A student wrote the following report about an experiment to measure the speed of sound in air.

My friend and I went into a field a long way from any buildings and measured the distance across the field. My friend stood at one side of the field and I stood at the other. My friend banged two pieces of wood together, and as I saw him do this, I started a stopwatch. I stopped the stopwatch when I heard the sound. We obtained the following readings.

distance across field = 238 m
time for sound to cross field = 0.7 s

(a) Why was it necessary to be a long way from any buildings?

.....[1]

(b) Why was it necessary to use such a large distance?

.....[1]

(c) Suggest what the students could have used to measure the distance across the field.

.....[1]

(d) Why was there a delay between the student seeing the pieces of wood come together and hearing the bang?

.....

.....[2]

(e) Use the readings to calculate the speed of sound.

speed of sound = ... [4]

(f) Suggest why it might have been a good idea for the students to repeat the experiment after they had exchanged positions.

.....

.....[1]

root19

10 **(a)** The apparatus shown in Fig. 10.1 can be used to indicate when there is a force on the copper rod.

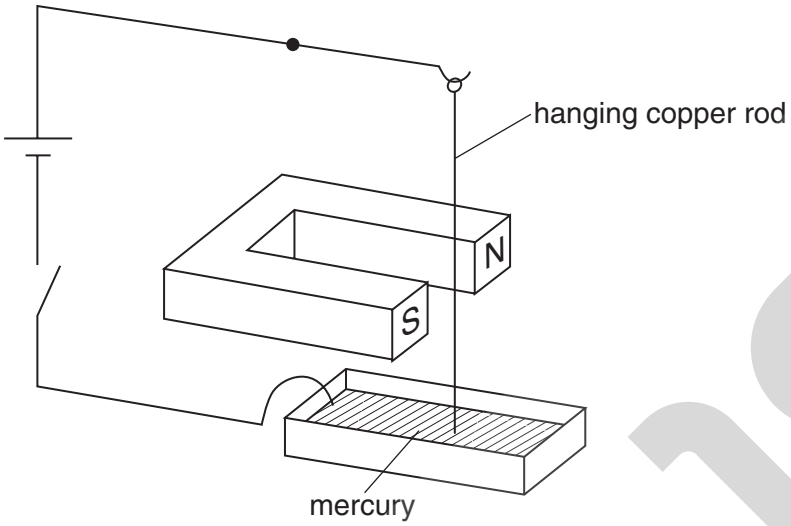

Fig. 10.1

(i) Suggest what is seen to happen to the hanging copper rod when the switch is closed.

.....

.....

(ii) Explain your answer.

.....

.....

(iii) The cell is reversed and the switch closed.

How does what is seen now differ from what you described in **(a)(i)**?

.....

[4]

root 19

(b) Fig. 10.2 represents a d.c. motor.

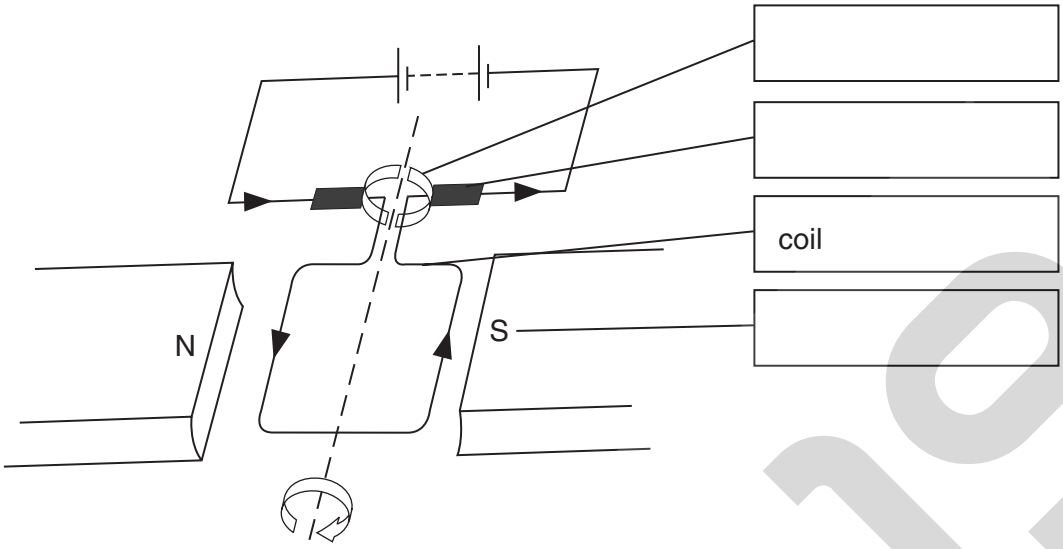

Fig. 10.2

(i) In the boxes, label the various parts of the motor. One part has been labelled as an example.

(ii) Which part of the motor ensures that the coil keeps rotating when the battery is connected?

.....

(iii) The battery is reversed. What difference does this make to the motor?

.....

[5]

11 **(a)** Fig. 11.1 shows a reed relay in a simple circuit.

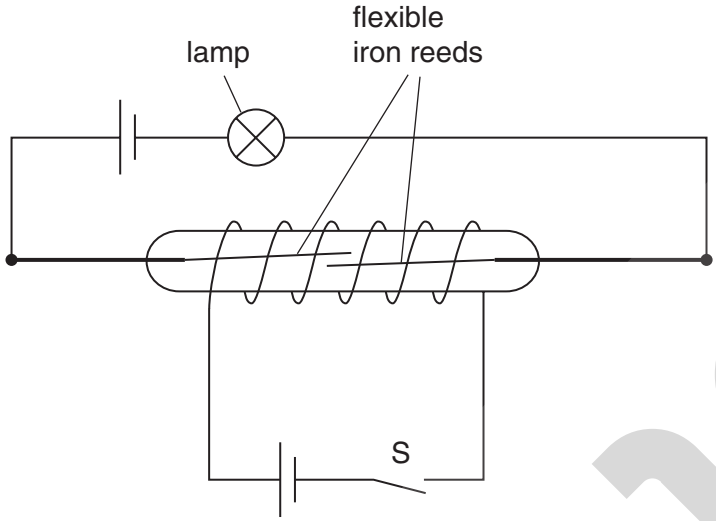

Fig. 11.1

Explain why the iron reeds touch each other when switch S is closed.

.....

.....

.....[4]

(b) Fig. 11.2 shows a simple temperature-operated alarm.

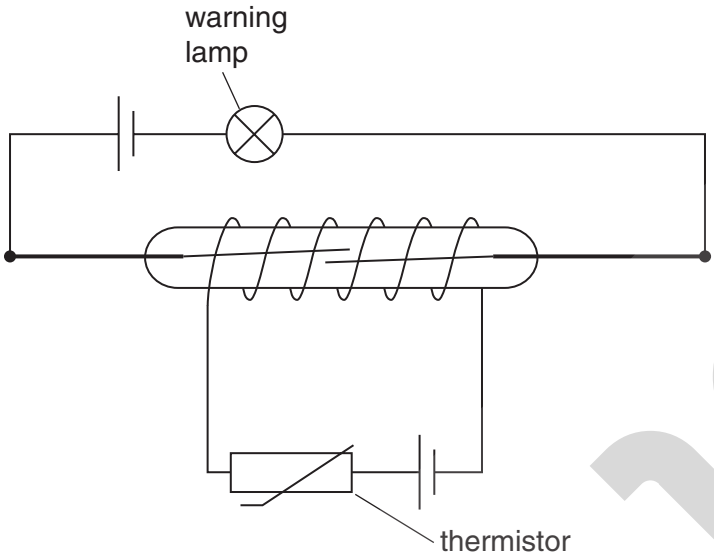

Fig. 11.2

When the thermistor is cold, its resistance is too high to allow sufficient current to operate the reed relay. The resistance of the thermistor decreases as the temperature increases.

Describe what happens to make the warning lamp light as the air temperature changes.

.....

.....

.....

.....

.....[4]

ROOT 19

12 **(a)** A narrow beam of red light strikes one face of a triangular prism at A, as shown in Fig. 12.1.

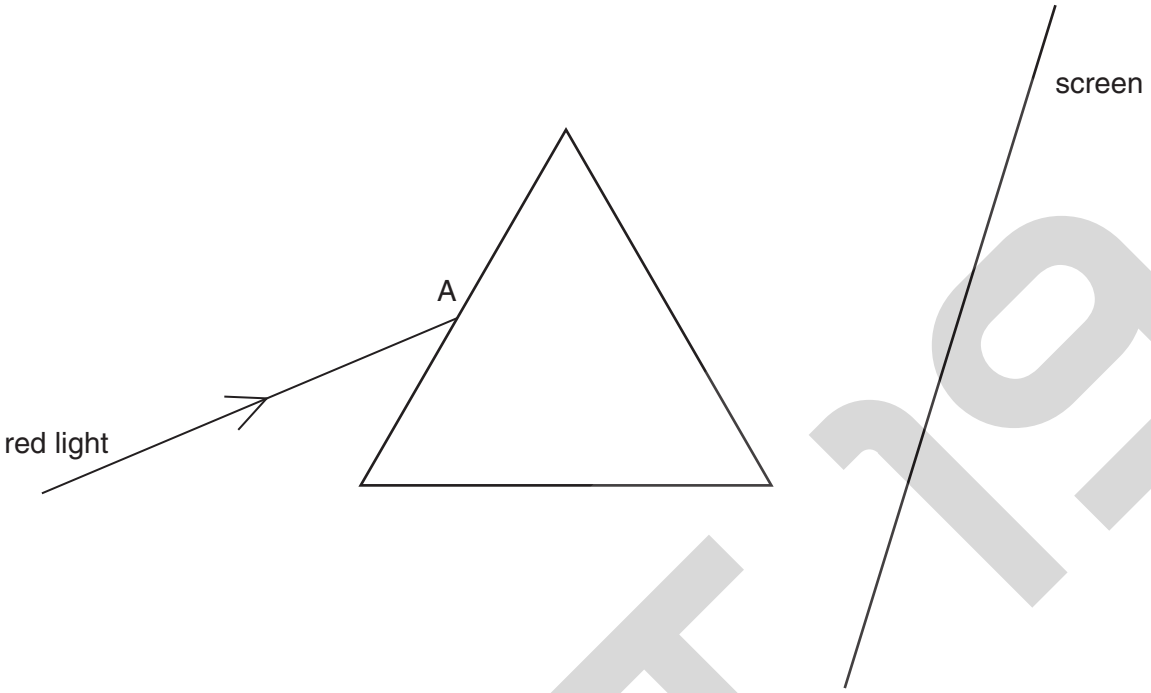

Fig. 12.1

(i) On Fig. 12.1, show the path of the beam until it reaches the screen.

(ii) What name do we use to describe what happens to the beam at A?

.....

[4]

(b) The red light is replaced by a narrow beam of mixed red and violet light, as shown in Fig. 12.2.

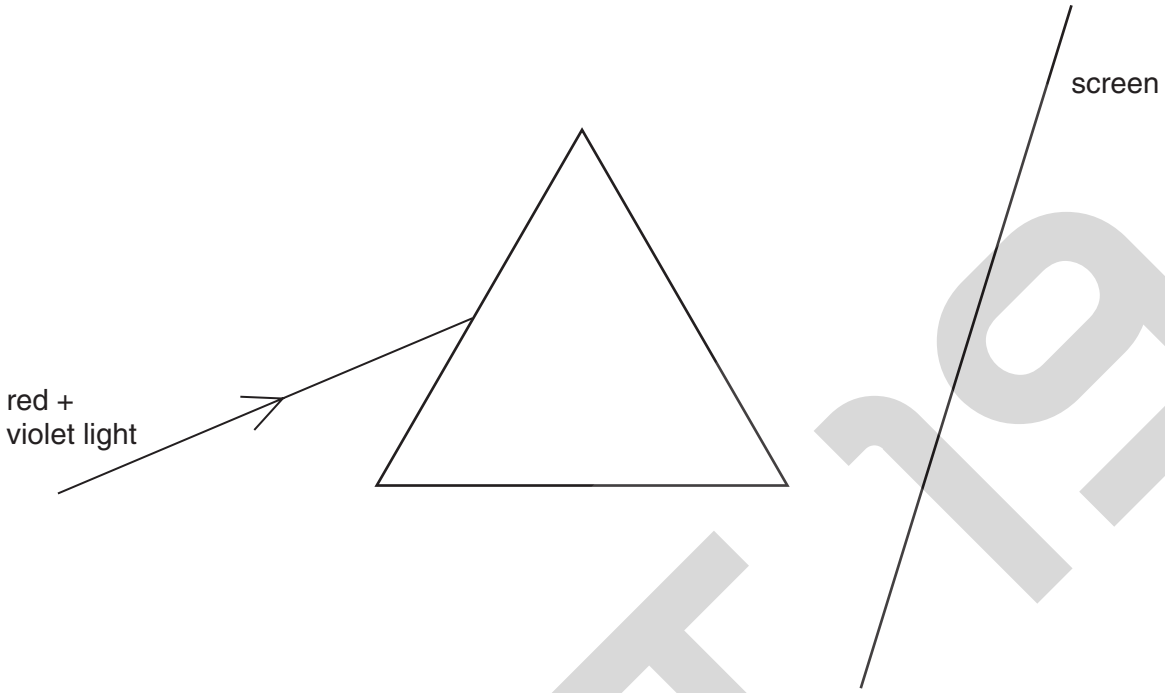

Fig. 12.2

Complete Fig. 12.2 to show what happens to the red and the violet light. [2]

(c) The beam of red and violet light is replaced by a narrow beam of white light from the Sun. State what is now seen on the screen.

.....[1]

(d) The rays from the Sun also include infra-red rays. Infra-red radiation can pass through glass.

(i) On Fig. 12.2, mark with the letter X the place where infra-red radiation from the Sun might strike the screen after passing through the prism.

(ii) Why can infra-red not be seen on the screen?

.....

(iii) What could be used to detect the infra-red radiation?

.....
[3]

BLANK PAGE

root 19

BLANK PAGE

ROOT 19

BLANK PAGE

root 19